CALIFORNIA TOWNSHIP

T 32 N, R 2 W

K21

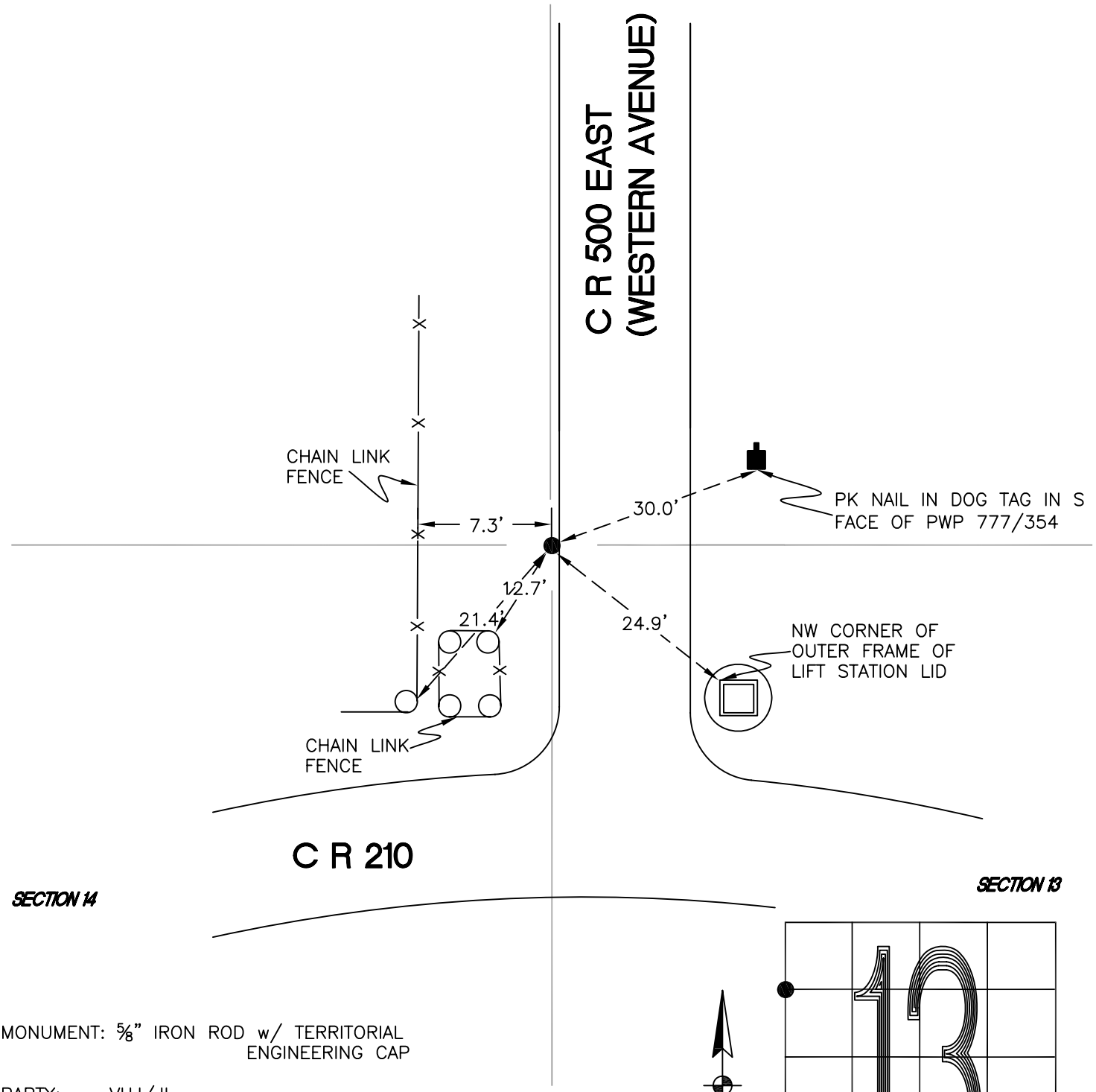

MONUMENT: 5/8" IRON ROD w/ TERRITORIAL ENGINEERING CAP

PARTY: VHJ/JL

DATE: 2/12/2013

COMMENTS: FOUND IN 2003 BY VHJ. 1/2" IRON ROD FOUND BY DWC/SJF IN 1991 IN SAME LOCATION.
THIS IS THE SE CORNER OF GOVERNMENT LOT ONE.

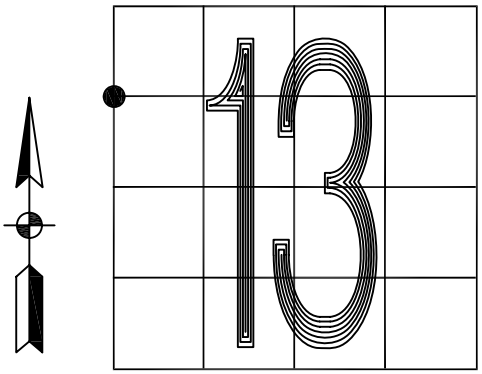

CORNER LOCATION IN THE SECTION

K21